CLOSED COMBUSTION FIREPLACE

950Log base/950/950 Insert

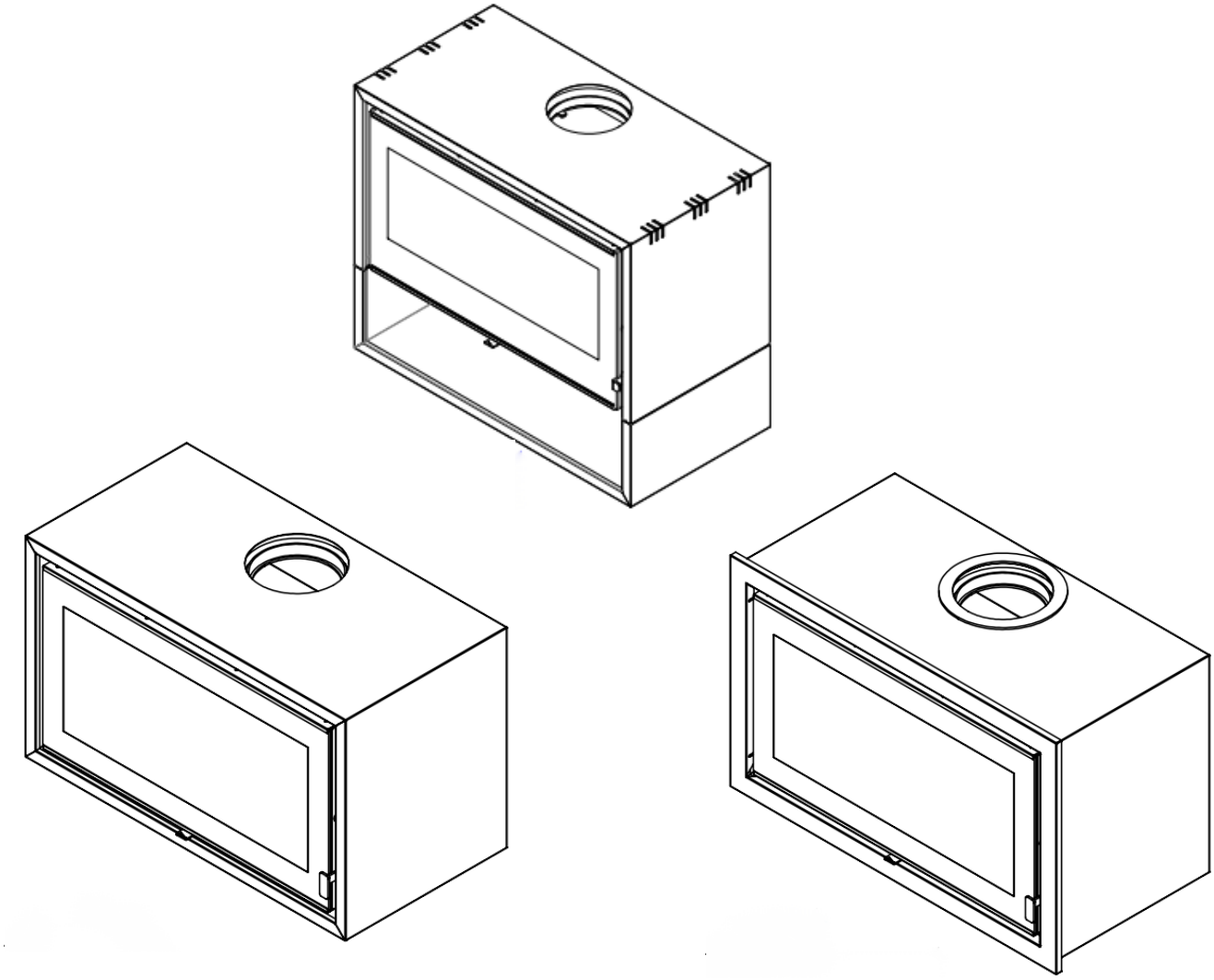

ASSEMBLY & OPERATING INSTRUCTIONS

Important: Read these instructions for use carefully so as to familiarize yourself with the

appliance before installing and using it. Keep these instructions for future reference. We reserve the right to make changes to this manual without prior notice.

INTRODUCTION

Thank you for purchasing this Closed Combustion Fireplace. Before attempting to install or use the fireplace, please read this manual throughout and follow the instructions carefully.

Thoroughly familiarize yourself with this fireplace & its operation in order to ensure the safety of yourself and others around you. Henceforth, you can look forward to the fireplace giving you long and satisfactory service. This fireplace is designed to operate with “hardwood fuel”; no other fuels should be used in this fireplace.

Please note that details and specifications contained herein are correct at the time of going to print. All data is applicable to wood burning use only. We reserve the right to change specifications at any time without prior notice.

Please note that details and specifications contained herein are correct at the time of going to print. All data is applicable to wood burning use only. We reserves the right to change specifications at any time without prior notice.

PRODUCT SPECIFICATION

Product	950 Log Base	950	950 Insert
Weight (kg)	177	162	164
Heat Output (kW)	13kw - Max 16kw		
Flue Outlet	Top		
Glass Size (mm)	847*467		
Flue Size (mm)	ID 201		

Overall Sizes

950 Log Base

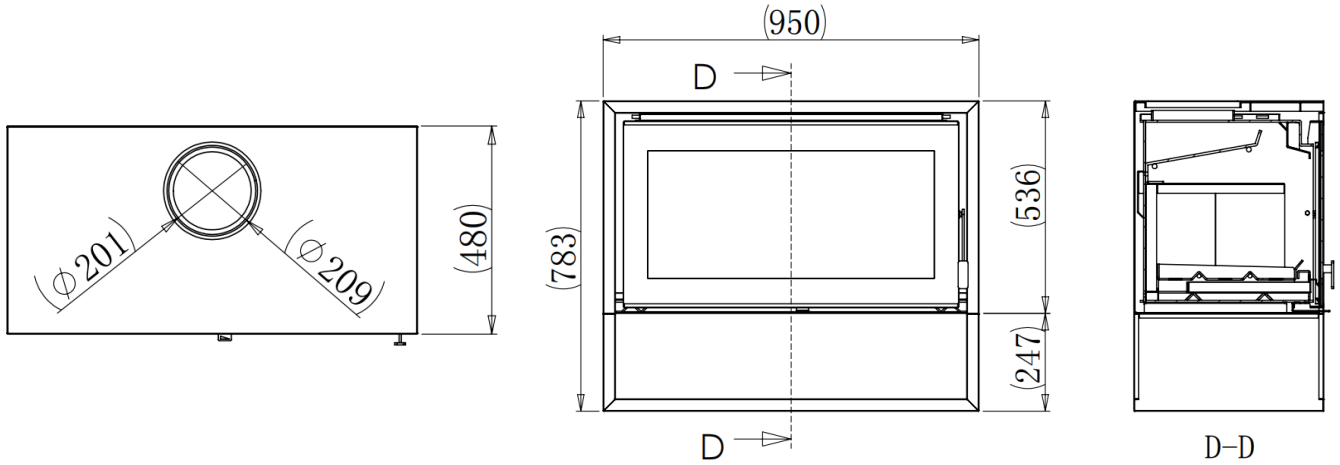

950

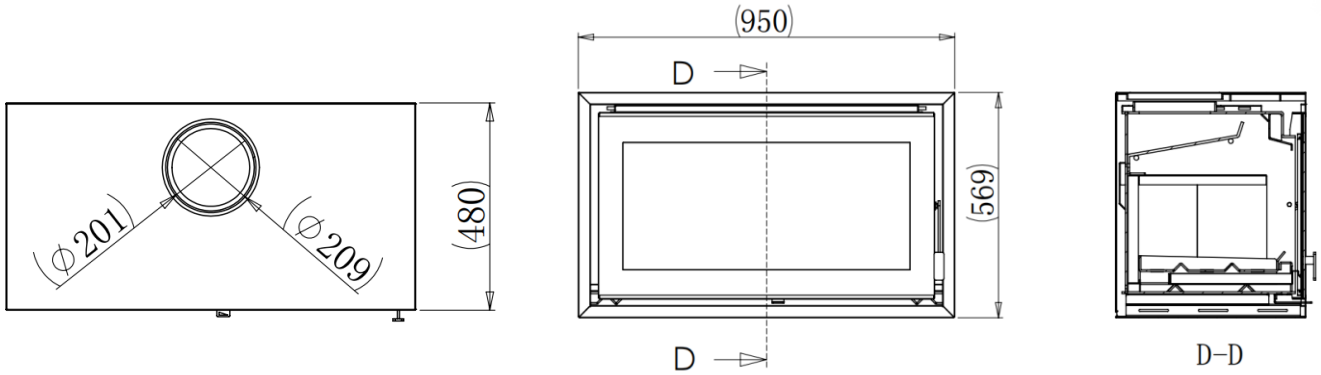

950 Insert

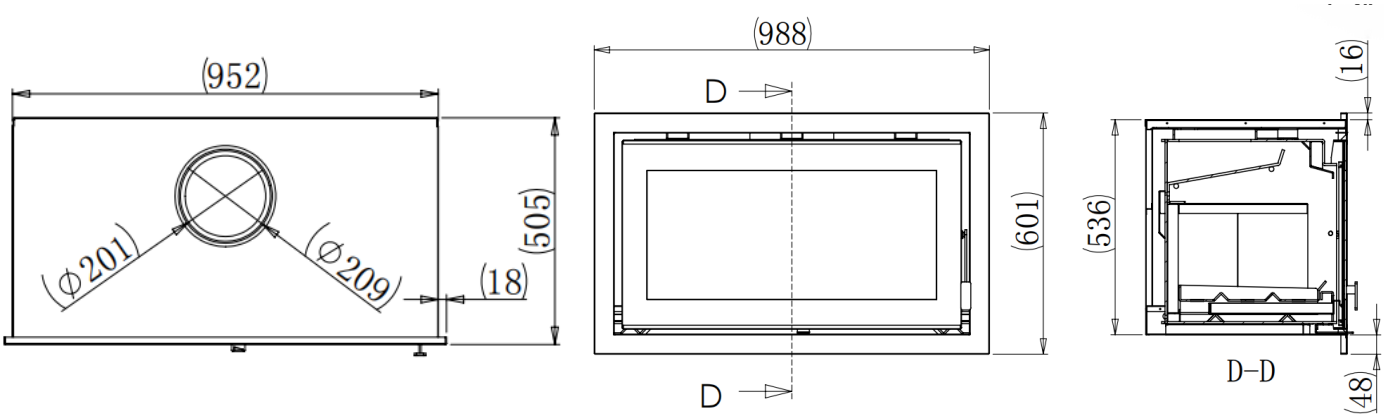

INSTALLATION OF THIS PRODUCT

WARNING!

AN ACCREDITED FIREPLACE INSTALLER SHOULD CARRY OUT THE INSTALLATION OF THIS FIREPLACE. ALTERNATIVELY, SHOULD A NONACCREDITED INSTALLER UNDERTAKE THE INSTALLATION, YOUR LOCAL BUILDING CONTROL OFFICER WILL BE REQUIRED TO APPROVE THE COMPLETED INSTALLATION.

IF THE FIREPLACE IS NOT FITTED CORRECTLY, BY AN ACCREDITED PERSON OR OUTSIDE THE SCOPE OF THIS MANUAL IT COULD RESULT IN A HOUSE FIRE OR CARBON MONOXIDE POISONING.

READ ALL THE INSTRUCTIONS CAREFULLY BEFORE INSTALLATION

The instructions cover the basic principles to ensure satisfactory installation of the fireplace, although details may need a slight modification to suit particular site conditions. In all cases the installation must comply with current Local Authority Byelaws.

This guidance information in no way replaces your responsibility as an installer or end user to comply with the appropriate standards.

SAFETY WARNINGS FOR YOUR GUIDANCE

THIS FIREPLACE WILL BE HOT when in operation and due care should be taken. Thick gloves should be used to operate the primary/ secondary controls or reaching inside the fireplace to position fuel or remove ash.

FIRES CAN BE DANGEROUS - Always use a fireguard in the presence of children, the elderly or the infirm.

DO NOT OVERFIRE - it is possible to fire the fireplace beyond its design capacity. This could damage the fireplace, so watch for signs of over firing - if any part of the fireplace starts to glow red, the fireplace is in an over fire situation and the controls should be adjusted accordingly. Never leave the fireplace unattended for long periods without first adjusting the controls to a safe setting. Careful air supply control should be exercised at all times.

THIS FIREPLACE MUST BE CONNECTED TO A SUITABLE FLUE OUTLET. **Due to high temperatures this fireplace should be located well away from furniture and curtains. Children and adults should be alerted to the hazards of hot surfaces. Young children should be carefully supervised when they are in the same room as the fireplace. Do not place clothing or other flammable material on or near the fireplace. Keep the fireplace area clear of combustible materials, flammable liquids or vapours.**

CARBON MONOXIDE POISONING CAN BE FATAL. Due consideration should be given to the dangers of carbon monoxide poisoning following incomplete combustion of solid fuels in an enclosed space. See page 14 in this booklet. Ensure the room were this product is installed is well-ventilated, additional air bricks may need to installed to allow for a source of permanent ventilation.

GENERAL SAFETY RULES

1. **ALWAYS** read and understand the manual before installing and commissioning the fireplace.
2. **ALWAYS** ensure the fireplace is installed in accordance with local regulations.
3. **ALWAYS** ensure that the fireplace is correctly installed and positioned as described **in the diagram** on page 7, and that the immediate area is kept clear.
4. **ALWAYS** check for damage before using the fireplace. Check for breakage of parts and any other condition that may affect the fireplaces performance. Any damage should be properly repaired or the part replaced. If in doubt, **DO NOT** use the fireplace. Consult your local dealer.
5. **ALWAYS** keep children and visitors at a safe distance from the fireplace.
6. **NEVER** direct any kind of liquid on to the fireplace, particularly when it is hot.
7. **NEVER** use gasoline or other flammable liquids for fire starting.
8. **NEVER** use the fireplace to incinerate materials other than recommended fuels.
9. **NEVER** carry out any modifications to this product. If experiencing difficulty of any kind consult your local dealer.
10. The installation of the fireplace and chimney MUST comply with all local building regulations. It is the responsibility of the owner and the installer to ensure that the installation complies.
11. All rooms where a fireplace is situated must have a non-motorized air vent (air brick). Refer to details contained in the Building Regulations.

UNPACKING & ASSEMBLY

UNPACKING

Before assembling, please check contents against the following list and advise your dealer immediately if any parts are missing.

TOOLS REQUIRED

- screwdriver
- Adjustable spanner
- Fire Cement

ASSEMBLY

You can either:

- Use a registered installer who can self certify that the work he does complies with the relevant Building Regulations; or
- The consumer applies to their local authority building control department for a building notice, and pays the appropriate fee.

It is generally worthwhile to use an accredited installer who will supply a Certificate of Compliance as a record of the job and that it complies with Building Regulations.

SUPPORTING FLOORS

The fireplace must only be installed on floors with an adequate load bearing capacity and if the existing construction is not suitable, additional measures such as a load distributing plate must be provided. The hearth should be able to accommodate the weight of the fireplace and its chimney if the chimney is not independently supported.

Fireplaces should stand wholly above hearths made of non-combustible board/sheet material or tiles at least 12mm thick, if the fireplace is not to stand in a recess and has been tested to an applicable standard to verify that it cannot cause the temperature of the upper surface of the hearth to exceed 100°C.

Constructional hearths should be made of solid, non-combustible material such as concrete or masonry, at least 125mm thick, including the thickness of any non-combustible floor and/or decorative surface. A additional 400mm hearth gap should be provided in front of the fireplace in case logs, coals or other burning or hot objects fall from the fireplace when the door is opened.

Specific guidance for surfaces on which the fireplace may be allowed to stand should be of ceramic or concrete construction. When the fireplace is positioned near a wall constructed of flammable material, the distances shown on Fig must be adhered to. Alternatively, a heat shield may be used, mounted according to the position of the fireplace. A firewall must be at least 100mm thick and typically made of brick, or concrete/stone.

MATERIAL CLEARANCES

The fireplace must have a minimum clearance of 1200mm to a combustible ceiling above.

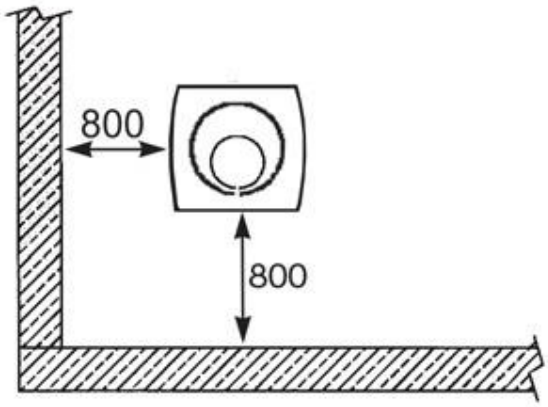

Min distance to combustible Wall

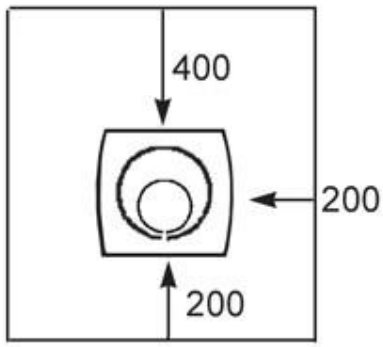

Floor Protector
Minimum Size (mm)

It is recommended that the fireplace be installed at least 800mm from combustible materials. However, any household furnishings should be at least 1000mm away as they could be adversely affected by heat.

The fireplace can be recessed in a suitable sized fireplace but a permanent free air gap of at least 200mm must be left around the sides and top and at least 50 mm at the back of the fireplace to obtain maximum heat output and for access to the rear of the fireplace.

MINIMUM DISTANCE TO COMBUSTIBLE MATERIALS

Note: combustible material refers to any material that will degrade when subjected to heat e.g. plaster. Due to the heat of a hot fireplace, a suitable fireguard should always be used to provide additional protection. Never allow young children to be left unsupervised in a room containing a hot fireplace.

THE CHIMNEY (FLUE)

The fireplace should never be connected to a shared chimney/flue system.

Flue pipes with a smaller cross-sectional area than that of the fireplace outlet should never be used. Flue pipes must not project into the chimney connector, such as to cause a restriction to the gas flow.

The minimum size for a masonry chimney (not flue) is 230mm in diameter. A larger chimney size can affect the performance of the fireplace.

Liners should be installed in accordance with their manufacturer’s instructions. Appropriate components should be selected to form the flue without cutting and to keep joints to a minimum.

Bends and offsets should be formed only with the matching factory-made components. Liners need to be placed with the sockets or rebate ends uppermost to contain moisture and other condensates in the flue. Joints should be sealed with fire cement, refractory mortar or installed in accordance with their manufacturer's instructions.

Ensure the joints are completely sealed, as air leakage will lead to poor performance. Avoid having more than two bends in the flue system. Any offset between bends should be minimized and the flue should be equipped with suitable access doors for inspection & cleaning.

THIS FIREPLACE MUST NOT BE INSTALLED INTO A CHIMNEY THAT SERVES ANY OTHER HEATING APPLIANCE. THERE MUST NOT BE AN EXTRACTOR FAN FITTED IN THE SAME ROOM AS THE FIREPLACE, AS THIS CAN CAUSE THE FIREPLACE TO EMIT FUMES INTO THE ROOM.

FLUE HEIGHT

The chimney height and the position of the chimney should conform to the manufacturer's recommendations. Flues should be high enough to clear the products of combustion. The height necessary for this will depend on the type of the appliance, the height of the building, the type of flue and the number of bends in it, and an assessment of local wind patterns. However, a minimum flue height of 4.5m could be satisfactory. External flue pipes should be 'twin wall'. These retain the heat, enabling it to rise and disperse from the chimney. See diagram Fig 1 below for effective flue height recommendations.

The outlet from a flue should be above the roof of the building in a position where the products of combustion can discharge freely and will not present a fire hazard, whatever the wind conditions.

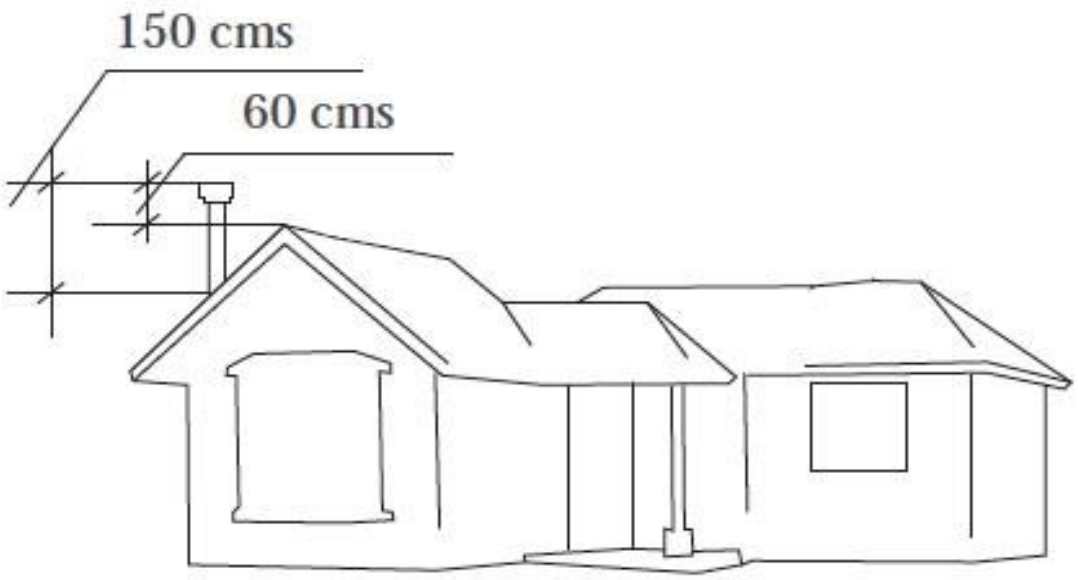

Fig 1

BENDS IN FLUES

Offsets in flues are only acceptable if the following rules are respected:

a) The chimney system shall have no more than 4 bends in total; - 2 bends in the chimney and 2 bends in the flue pipe connection.

b) The offset shall provide a change of direction no more than 45 degrees from the vertical.

c) The run of the chimney between bends shall not exceed 20% of the total chimney length.

The maximum length of the horizontal flue must not exceed 300mm, and it must be followed by a vertical section of at least 2.5 meters in length, preferably insulated chimney components.

INSPECTION & CLEANING

Check that the chimney is in good condition, dry and free from cracks and obstructions. The diameter of the chimney should not be less than 200mm. If any of these requirements are not met, the chimney should be lined by a suitable method.

The chimney must be swept before connection to the fireplace. Where the chimney is believed to have previously served an open fire installation, it is possible that the higher flue gas temperature from the fireplace may loosen deposits that were previously firmly adhered, with the consequent risk of flue blockage. It is therefore recommended that the chimney be swept a second time within a month of regular use after installation.

Assuming that when the fireplace is first installed, the chimney is clean, and sound, then the chimney flue should be inspected part way through the burning season to establish the regularity of sweeping required. If you have any doubts about the suitability of your chimney, consult your local dealer/stockiest.

AIR FOR COMBUSTION

Any room or space containing a fireplace should have a permanent air vent opening of at least the sizes shown in the table below. For fireplaces designed to burn “hardwood” solid fuels, the air supply should be designed to accommodate burning the fuel that produces the highest heating output.

FIREPLACE AIR SUPPLIES	

Stove with no flue draught stabilizer	**Permanently open vents as below:**
	
	If design air permeability>5.0m3/(h.m2) then
	550mm2/kW of appliance rated output above 5kW
	
	If design air permeability<5.0m3/(h.m2) then
	550mm2/kW for balance of appliance rated output

There must always be a permanent means of providing air for combustion into the room in which the fire is installed. A permanent vent with a total free area of at least 550mm2 for every kW rated above 5kW should be connected directly to the outside air or an adjacent room which itself has a permanent vent of the same size direct to the outside air**. The fitting of an extractor fan to either of these rooms is not permitted.**

CONNECTION TO THE CHIMNEY

This MUST be carried out by an accredited/competent person and/or approved by your local authority before using the fireplace.

Any existing flue must be in good condition with suitable access for collection and removal of debris.

It is also important that suitable flue pipe complying with manufacturer recommendations is used to connect the fireplace to the chimney flue and that suitable access is provided into the flue for regular inspection and sweeping of the flue ways.

Chimneys should be as straight as possible. Horizontal runs should be avoided except where the rear outlet (if applicable) of the appliance is used, in which case, the horizontal section should not exceed 300mm, and it must be followed by a vertical section of at least 2.5 meters in length, preferably insulated chimney components

Refer to the typical installation diagrams, Fig 2. Flue connections must be well sealed.

A non-combustible register plate minimum 1.5mm thick should be fitted to all installations between the flue and the building structure.

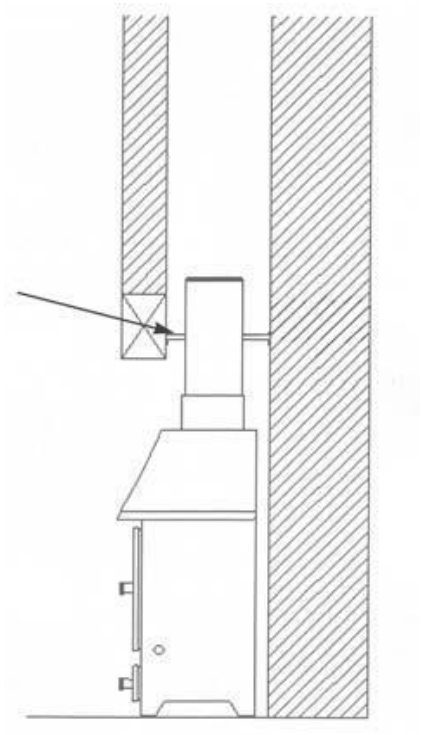

Fig 2 Horizontal register plate with top flue connection

CLEANING THE FLUE

Access for cleaning the flue should be incorporated in the system other than through the appliance (e.g. a soot door or access through a register plate).

FUME EMISSIONS

To avoid chimney problems, your fire should not be burnt slowly for longer than 12 hours without a period of fast burning. Properly installed and operated, this fireplace will not emit fumes. Occasional fumes from de-ashing and refuelling may occur. Persistent fume emission must not be tolerated. If fume emission persists, the following immediate action should be taken:

1. Open doors and windows to ventilate room.
2. Let the fire out, or eject and safely dispose of fuel from the fireplace.
3. Check for flue chimney blockage and clean if required.
4. Do not attempt to re-light the fire until the cause has been identified and corrected.

If necessary, seek professional advice.

Important! Never fit an extractor fan in the same room as this fireplace.

USING YOUR FIREPLACE

THE CONTROLS

AIR SLIDE

Moving the air slide to the left enables maximum air into the firebox. Moving air slide

to the right closes off air into the firebox, which slows the burn down.

WARNING: THE TEMPERATURE REACHED BY THESE ITEMS DURING

OPERATION MAY CAUSE AN INJURY TO AN END-USER. AS THESE ARE

INTENDED TO BE ADJUSTED DURING OPERATION, IT IS RECOMMENDED THAT PROTECTIVE GLOVES ARE WORN WHEN HANDING THESE PARTS.

950Log Base/950/950 Insert

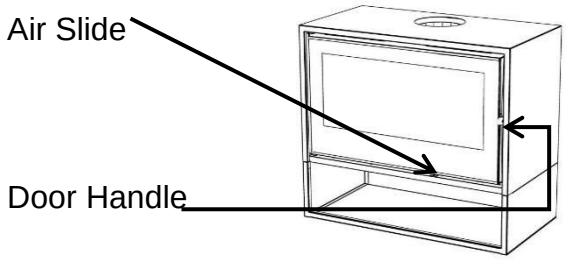

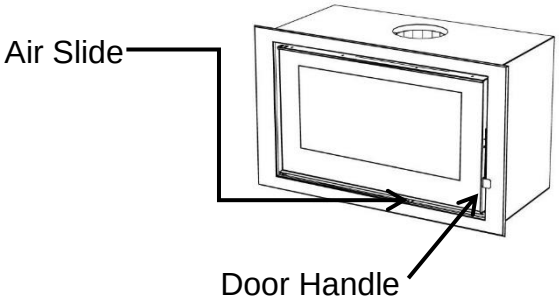

TYPES OF FUEL

Fuel should be dry and timber should be well seasoned (at least 8-12 months) so as to have moisture content below 20%. The use of damp wood will result in more soot and tar deposits being left in the chimney, flu and fireplace, and will not release heat if thermal energy is being used to drive out moisture from the fuel.

Do not use other fuels such as coal or anthracite in this fireplace. Do not use the fireplace to incinerate other materials including household waste. Do not use liquid fuels or accelerants in this fireplace.

Avoid using ‘green’ unseasoned wood, treated wood such as telegraph poles, or plywood / chipboard containing glues and resins which pollute the environment and cause the fire to burn too quickly. Such materials can produce excessive tar or creosote which can be damaging and in extreme cases cause a fire inside the chimney. Looking at the end of the log can assess the dryness of wood. Radial cracks, deep enough to be considered as splits should be present in dry, seasoned logs. This level of dryness may take up to two years to achieve.

The maximum length of fuel suitable for this fireplace is approx. 35cm so as to lay flat over the embers, and logs of greater than 8 cm diameter should be split.

FIREBRICKS

The firebricks are designed to fit in the base and along the rear and side walls of the firebox. Please ensure the bricks are fitted before using the fire.

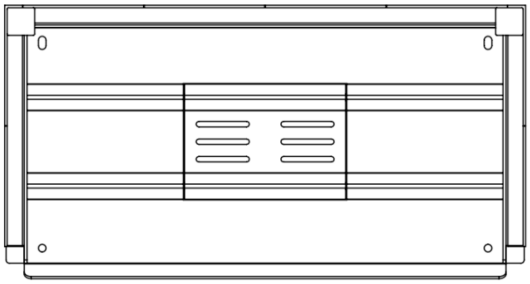

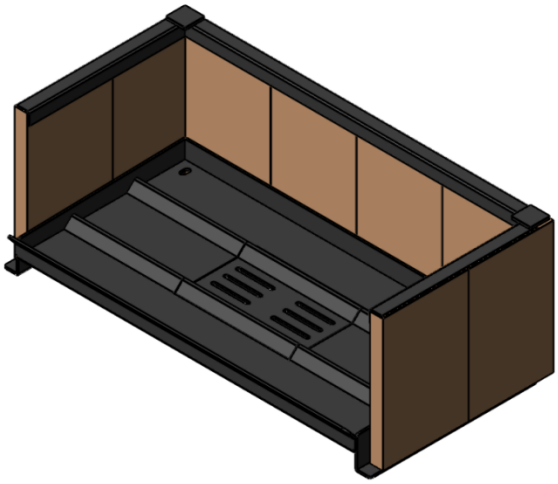

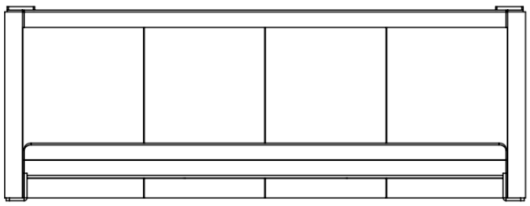

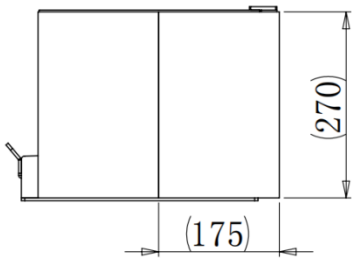

LIGHTING YOUR FIRE

1) Place firelighters and pieces of crumpled newspaper in firebox floor.
2) Cover the paper with small diameter split kindling.
3) Place 3 - 4 small pieces of firewood on top of the kindling.
4) Open air slide fully.
5) Light several parts of the newspapers.
6) Close the door to avoid smoke spillage. Do not close latch, this will allow extra air into the firebox and helps create a draft.

After approximately 10 minutes:

7) Once firewood is fully ignited, **CLOSE DOOR FULLY.**

INITIAL OPERATION PERIOD

Operate your first few fires to allow the high temperature paint to cure.

NOTE: For the first few fires the high temperature paint curing may cause an odour. Ensure sufficient ventilation is supplied to allow dissipation of any smoke and odour.

THIS ODOUR IS NORMAL

GENERAL OPERATION

Refueling on to a low fire bed

If there is insufficient burning material in the fire bed to light a new fuel charge, excessive smoke emission can occur. Refueling must be carried out onto a sufficient quantity of glowing embers and ash that the new fuel charge will ignite in a reasonable period. If there are too few embers in the fire bed, add suitable kindling to prevent excessive smoke.

Fuel overloading

The maximum amount of fuel specified in this manual should not be exceeded, overloading can cause excess smoke and serious damage to your fireplace.

Operation with door left open

Operation with the door open can cause excess smoke and serious damage to your fireplace. The appliance must not be operated with the appliance door left open except as directed in the instructions.

Dampers left open

Operation with the air controls or appliance dampers open can cause excess smoke and serious damage to your fireplace. The appliance must not be operated with air controls, appliance dampers or door left open except as directed in the instructions.

LIGHTING THE FIRE

- Prior to lighting the fire for the first time, ensure that-
- Installation and building work are complete.
- The chimney is suitable and has been swept and free from obstruction.
- Adequate ventilation and provision for combustion air has been made.
- That the stove installation has been carried out in accordance with Building Regulations and any
- applicable local regulations as well as these installation instructions.
- That chimney draw has been checked and within specification. (The stove has been tested at nominal output with a flue draught of 12 Pa)

ESSENTIAL INSTRUCTIONS BEFORE USE – It is essential to follow these ‘tempering-in’ instructions in order to avoid serious damage to your stove. The steel of your stove requires very gentle ‘normalizing’ to

Release stresses in the metal formed during the manufacturing process. The high temperature paint finish also requires curing: -

Initial paint curing:

Note: NEVER wipe the stove in the early stages (prior to paint fully curing), as the paint will be very soft and will damage easily. NEVER attempt to clean or wipe the paint surface when warm or hot. Please read the following and follow thoroughly.

The stove is finished in specialist high temperature coating which is air-dry but not yet cured. The stove should be brought up to temperature gradually over the course several fires to complete this process. If the stove gets too hot or not hot enough during this process, then the curing process can fail, causing issues with the paint surface.

For the first three fires (all on the same night), use KINDLING ONLY, with each burn lasting for 15-20 min and each fire using approx. 1500 grams of kindling. The door must be closed, but not latched during the burning of kindling only. Start the second and third kindling fires whilst the fire is still warm from previous fires, but with around 20 minutes cooling time in between. Once the three kindling fires have burnt through, and whilst the stove is still warm, but slightly cooled, light a normal fire with three dry hardwood logs weighing around 3 kgs in total.

The door must now be fully latched. This fire should burn for between 45 and 60 minutes. Now allow to FULLY COOL naturally. The paint should now be cured. Please note that a chemical smoke will be emitted!

Once the curing process has been completed satisfactorily, normal fires can be lit for stage 2 -

Next Stage - stove tempering:

For the first 3 hours burning, use just small wood fires, then for the next 15-20 hours, total burn time, fires must be very gently increased in temperature and log size and load.

A stove thermometer will be a valuable tool in helping you to achieve this and to ensure an efficient burn rate in future. After these small fires, gently increase fires over the course of a week or so. Starting a large fire too soon is likely to damage the stove in which case will not be covered by the warranty.

ENSURE THAT YOU HAVE READ AND UNDERSTOOD THESE INSTRUCTIONS BEFORE LIGHTING THE FIRE, AND THAT YOU ARE CONFIDENT THE STOVE HAS BEEN INSTALLED CORRECTLY.

ALWAYS WEAR A PROTECTIVE GLOVE WHEN REFUELLING YOUR STOVE.

Ignition (FOLLOW INITITAL TEMPERING INSTRUCTIONS FIRST TO AVOID DAMAGE)

- Ensure the ash-pan is in place.
- Ensure all air inlets are fully open
- Construct a pile of kindling in the middle of the grate using approximately 1kg of kindling wood
- Light with a single chemical firelighter
- Partially shut the door but leaving it cracked open slightly
- After about 5 minutes or when the fire is well established, shut the door completely
- After a further 3-5 minutes as the fire starts to die, add a further three larger pieces of wood weighing approx. 1kg each.

- Once theses logs are alight, and after about 7 minutes or so, a normal load of 2 or 3 logs weighing up to 1.5kg each, can be added (ONLY AFTER THE INITIAL TEMPERING PERIOD HAS BEEN FOLLOWED – SEE ABOVE)

Refueling

Once the heater has been burning on high for approximately 20 to 30 minutes it will have reached operating temperature. You may now slow the burn down by adjusting the air slide into the closed position.

When adding wood, open the air slide fully, wait a few seconds, then open the door slowly. After reloading, leave air slide open, on high for 15 - 20 minutes to allow new fuel to catch freely and entirely.

Then re-adjust the air slide to desired setting for maximum efficiency. If the fire is too small, refuelling first with kindling is advised.

At high power output, your stove will require refuelling approximately every hour. It is important to follow these instructions in order to achieve clean burning and to maximize the efficiency of the stove:

- Do not leave the fire unattended until flames are well established on the newly charged logs
- Always refuel onto hot embers.
- If the fire has died out at the point of refueling, use kindling to re-establish the fire and follow the “Ignition” procedure above.

It is important that the stove is not overloaded with fuel!

Operation with the door open can cause excessive smoke. The appliance must not be operated with the door left open except as directed in the instructions above.

OVERNIGHT BURN

An overnight burn can be achieved by following these steps an hour before retiring:

1) Open air slide fully
2) Load with large pieces of dry wood
3) When all wood is burning, slowly move the air slide to low position.

NOTE: This procedure can be done at any time, for example, in the morning so that the fire is still going later that day.

ASH REMOVAL

Keep the fireplace free from a heavy build-up of ash. The frequency of this is dependent upon the type and quality of fuel being used. Ash should be removed before it builds up to the underside of the grate, at which point, the grate would be burning hot on both sides, shortening its life expectancy.

When disposing of ashes, ensure they have cooled and always place in a metal container. Be sure to remove the ash when the fire is at its lowest point, such as first thing in the morning.

ACCESSORIES

Refer to your local dealer for a full range of flue kits, flue pipes and other accessories for use with this classic Closed Combustion fireplace.

If disposing of this product or any damaged components, do not dispose of with general waste. Metal products should be taken to your local civic amenity site for recycling of metal products.

MAINTENANCE AND CLEANING:

Regular cleaning of the stove is essential for safety and efficiency. The ash-pan should be checked/ emptied at least after every use, and during use if burning for longer periods. Extra care must be taken when removing warm or hot ashes.

Step by step maintenance instructions:

1. A minimum of once per year the flue system should be cleaned/swept by a qualified chimney sweep or suitably qualified stove installer. The servicing of the appliance can usually be carried out at the same time. Whether the system needs sweeping more frequently than this will depend on use.
2. Baffle plate should be removed and checked for debris twice a year as a minimum depending on use. Warped/misshapen baffle plates can be a warning sign that the stove has been over-fired (allowed to excessively heat on one or more occasions). Once removed, brush the baffle using a stiff brush or wire brush to remove any deposits. Clear any debris from the upper parts of the stove above where the baffles normally sit.
3. Inspect firebricks on both the sides, rear and base for cracks - (some are normal and not a fault. Nor are they detrimental to the workings of the stove, however it is good practice to be aware as any develop and over time if they worsen, they may need replacing). If you feel a crack in the firebrick is just cosmetically unsightly it can be filled with a small amount of fire cement.
4. Vacuum or brush out the inner stove box thoroughly. Particular attention should be given to the air inlet controls, which can become obstructed.
5. Visually check that the glass is still making a good seal against its rope on the inside of the door frame and that it’s retaining clips remain firmly in place to the touch.
6. Check that the door is making a good seal with the body of the stove all around (over time the rope will flatten out and loose some flexibility - when this happens and when it is no longer sealing fully all the way round, it needs to be replaced).
7. Blemishes or scratches to the paintwork can be touched up using a suitable high temperature stove paint in a spray can. Ensure the stove is cool and clean before applying and follow the paint manufacturer’s instructions.
8. Throughout the season, it is good practice to keep the stove in generally good clean order which will prolong the life of serviceable components and enhance the experience you have with your fire. NEVER wipe the stove in the early stages (prior to paint fully curing), as the paint will be very soft and will damage easily.

9. To keep the outer body clean, simply dust over with a clean soft duster when cold. If there are marks which cannot be removed with a duster, use a slightly moistened cloth very gently, but only when the stove is cool and has not been in use. Then pat dry with absorbent paper towel. Regularly vacuum soot and dust from around the inside of the door and around the glass and rope seals.
10. If glass gets dirty on the inside from soot, clean with liquid 'stove glass cleaner' and a soft cloth OR with an "Atmosfire Dry Wiper", produced by Schott, (manufacturers of stove glass), and available online. Do this as soon as possible once the soot appears, but only when the fire is completely cool. Never use newspaper or soot or any other abrasive or cleaning method on the glass.

11. FIREPLACE BODY:

a. The fireplace is finished with a heat-resistant paint, which can be cleaned with a soft brush. Wait until the fireplace has cooled down before doing this. This finish can be renovated with heat resistant fireplace paint, although the paint may not be an exact match and it may be necessary to repaint the complete fireplace.

b. If the fireplace is purely ornamental, painting will provide a durable, attractive finish. If the fireplace is used for heating, a high temperature heat resistant paint (available from your hardware or paint dealer) must be used, in either aerosol or brush applied form. Should rust become apparent, clean thoroughly with a wire brush and apply a suitable anti-rust treatment.

c. During prolonged periods out of use, the air inlets should be left open and the door left slightly ajar in order to circulate fresh air and discourage condensation from forming which could encourage corrosion.

d. Surface rust may occur on the outside of the fireplace, coastal or humid regions can cause this to happen faster than arid or dry regions. Proper cleaning and retreating may need to be done seasonally.

e. Heavy rains and strong winds may cause rain water to enter via the flue pipe and flood the internal cavity of the fireplace. Check the inside of fireplace for rainwater after storms or heavy rains and clean where necessary to prevent rust. Consult your local installer for examination of the flue pipe installation should the problem be persistent after every rain.

12. CHIMNEYS AND FLUE-WAYS :

i. It is important that the chimney, flue-ways and any connecting flue pipe are swept regularly. This means at least once a year for smokeless fuels and at least twice a year for wood and other fuels. Only wire-centered sweep's brushes fitted with a guide wheel should be used. If it is not possible to sweep all parts of the chimney through the fireplace, ensure there is adequate access to cleaning doors.
ii. After prolonged periods of not using the fire, the stove and flue system should be checked for blockages prior to re-lighting.

We recommend regular servicing and safety checks are carried out by a qualified engineer/competent person.

There must be no unauthorized modification of the appliance. Use only replacement parts recommended by the manufacturer.

Troubleshooting Solutions for Stove Problems

Installed and used correctly your stove will provide years of warmth with little effort, but used incorrectly will be difficult to achieve the results you expect and can be damage the stove.

Combustion is a complex chemical process with many variables, all of which need to be correct for your stove to burn correctly. Taking the time to understand these variables and the combustion process will make your life with your new stove a happy one.

1. Stove is difficult to light / keep lit

Common causes:

- **Damp fuel** – Wood should be maximum 20% moisture and ideally 12-15%. We strongly advise purchasing a digital moisture meter to test your logs. Always split logs in half and test the center of the log.
- **Poor draught** and chimney strength – Your chimney need to pull through adequate air for combustion. Flue draught should be between 12Pa and 18Pa – if in doubt consult a local expert.
- **Logs too big** – Always start fires small and gradually build them up. Begin with paper or solid firelighters, building a small fire with kindling (small sticks of wood) until the kindling is well alight and hot. Then gradually build the fire with your wood logs (not too thick). (Splitting the logs will increase the surface area allowing more thorough burning). Once the firebox is up to temperature, slightly larger logs can be added.
- **Chimney/flue blocked** – Excessive soot should not be allowed to build up in the flue – flues should be professionally cleaned when required and, in any case, at least once per year, or more if your chimney / fuel type is causing excessive soot build up.

2. Fuel burns too quickly

The rated output on your stove is based on burning dry seasoned hardwood and re-fueling every hour. By turning down the vent controls the fuel will burn slower and last longer.

Common causes:

- **Excessively strong chimney draught** – If by turning down the vents the fire still burns too quickly, this is normally due to excessively strong draught on the chimney. This will lead to over-firing of the stove which is inefficient, losing excessive heat into the chimney and pulling too much cold air through the house. A flue damper fitted into the first section of flue pipe can help to calm a chimney draught. (seek installers advice on this point)
- **Fuel type/size** – try experimenting with different types of wood/fuel and different sized logs. Slightly larger logs will burn slower. Softwood such as pine will burn particularly fast. Ideally use seasoned, naturally dried logs (hardwood) where possible.
- **The “air-tight” seal** between the fiber rope on the doors and the casting may have been lost, adjust door handle lock nuts to reinstate this seal.
- The fiber rope seal between the door and the glass may be leaking.
- The glass is not sealed; gently tighten glass-retaining clips. Do not over tighten.
- The fiber rope on doors and glass has worn out. Replace.

3. Smoke comes back into room

A small amount of smoke entering the room when you open the stove door is normal but should stop after a few seconds….

If smoke ever leaks constantly into the room stop using the fire immediately, shut down all vents on the stove, open windows and exit the room. Do not use the stove until a local expert has established the problem.

Common causes:

- **Insufficient air supply into the room** – do you have an air brick of sufficient size to feed the stove with air?
- **Blocked chimney** – have the chimney swept and checked by a registered chimney sweep.
- **Insufficient chimney draught** – can be due to a variety of reasons – please refer to previous text under "Poor draught and chimney strength"
- **Rapid condensation of the gases** - causing them to slow down and back up in the chimney – this can be due to too broad a chimney/flue, relative to the size of the appliance or the flue not being adequately insulated. You may need a flue liner and/or insulation in the chimney.

4. Glass gets dirty quickly

Common causes:

- **Top vents not open** – Your stove have a top vent. This controls the Air wash system – the top vent needs to be constantly open adequately to ensure enough air is coming into the stove. No Air wash will work fully when the stove is burning very slowly (slumbering).
- **Primary Vent left open** – Primary vent when left open will interfere with the operation of the Secondary (Air wash), causing blackening of the window. Always shut Primary once fire is established, and only ever open as much as necessary to get the fire going or to give a short 'boost' to new wood when refueling.
- **Poor fuel** – wet wood or softwood (e.g. pine) will produce a lot of tar, creosote and soot, dirtying the glass and eventually blocking the flue.
- **Insufficient chimney draught** – see previous note under "Poor draught and chimney strength".
- **Baffle plates incorrectly fitted** – correct the position of the baffle plate.
- **Fuel loaded to close to window** – The wood needs a good clear distance away from the glass – otherwise it will produce thick black marks on the glass and interfere with the Air wash airflow.

5. Not enough heat being produced

Common causes:

- **Poor quality fuel** – logs should be dry well seasoned hardwood.
- **Poor draught and chimney strength** – see previous notes.
- **Excessive draught** – too much heat being lost up the chimney – try a damper in the flue.
- **Insufficient air supply** - Check air supply is sufficient / vents on stove are clear. Does the room have a vent?
- **Not enough fuel being burned** – the rated output of your stove is based on burning beech wood (typical of most hardwoods), refueling once per hour. 1kg of this wood has approximately 4-5 kw hours of energy.
- Larger stove / stove with higher output required for room size.

- The fireplace has been recessed into the existing fireplace and a lot of heat is absorbed in the surrounding fireplace walls rather than being radiated into the room. Pull the fireplace forward.

6. **Too much heat in room**

Common causes:

- **Excessive chimney draw** – try fitting a damper unit in flue
- **Too much air supply** – close down primary vent, then if still too hot reduce tertiary and secondary vents.
- Stove may be too large for room size.

7. **Grate deformed / Baffle plate deformed**

Your stove will have been designed to operate correctly for many years with a relevant quantity of fuel and re-loading times. The grate and baffle plate can over time start to bow/deform – this can only be caused by very high temperatures. Using Solid Fuel products can accelerate this process but burning wood at too high a temperature can also cause damage to internal parts.

Common causes:

- **Excessive chimney draw** – try a damper in the flue.
- **Excessive primary air supply** – close down primary vents.
- **Incorrect fuel** – NEVER use Anthracite, Petroleum Coke, Bituminous fuel, House coal or any un authorized fuel.
- **Stove overloaded** – excessive burning of too much fuel.

The baffle plate and the inner linings of the stove, and the grate all designed to be replaceable parts – contact your local dealer to purchase them.

8. **What to do in the event of a chimney fire: -**
   - cut off the air supply to the stove, i.e. close the primary and secondary air supplies
   - move any combustible materials well-away from the stove
   - get everyone out safely
   - make sure that the fire brigade has clear access
   - call the fire brigade

Warranty

When purchased new from either Home Fires directly, or an Authorized Home Fires Retailer your new stove includes an Extended 5-year limited warranty on the main body of the stove.

We reserve the right to either repair or replace any fireplaces or components at our discretion. We will not be held accountable for any loss or damaged of any kind suffered due to the incorrect installation or operating of this fireplace.

This warranty is not transferable and applies to all residents within South Africa, Botswana and Namibia. Other countries will be considered on discretion by us.

Your extended warranty needs to be registered within 30 days of purchase and will be effective from date of purchase.

Failure to register on time will reduce warranty period to 12 months.

If you do not register in time, or have not purchased through an Authorized Retailer don't worry - our stoves are built to last and you are unlikely to have any issues. In the unlikely event you do encounter any problems, we will still be here to help.

The Warranty is valid for the first owner at the first installed location only (not transferable).

To qualify, the appliance must be installed to the relevant Building Regulations standards by a suitably trained competent person (Professional fireplace installer).

Original Certificate of installation and the commissioning report needs to be kept for reference in the event of warranty claim.

Original Proof of Purchase (receipt or invoice) must be kept for reference and proof.

Any use of the appliance contrary to any instructions in this manual will invalidate the warranty.

The 5-year Extended Warranty guarantees the main stove body be free of manufacturing defects for this period.

Excluded from any warranty are:

- Paint finish discoloration can occur normally and is not considered a fault. Paint which has failed to cure properly due to initial over or under firing is excluded from warranty.
- Consumable items including but not limited to internal firebricks, glass, baffle plates, grates, handles, log retaining bars, paint and surface finishes, door and glass rope seals.
- Damage caused by incorrect use, incorrect/ non-recommended fuel, over-firing or poor maintenance will not be covered and will invalidate the warranty.
- Damage caused by unauthorized modifications or repair.
- Faults or defects caused by local specific conditions such as draught problems or chimney defects.
- Damage caused by corrosion due to the appliance being stored in unheated damp environments or by excessive moisture ingress via flue system.

Warranty claims are limited to the repair or supply of replacement parts or entire appliance where necessary (to be determined by Home Fires), and fitment of the replaced or repaired part if required, at the Home Fires factory. This is not an 'onsite' warranty and any installation or removal costs or incidental costs will neither be covered nor accepted. The customer is responsible for returning the damaged part to our factory when requested to do so.

In the event of a successful warranty claim Home Fires reserve the right to either replace, repair or refund the purchase price of the goods in question.

Replaced or repaired parts are covered for the remainder of the Warranty period.

Should you encounter any problems with your system and if there is any doubt as to the cause of the issue, first contact your installer. If the appliance is suspected to be at fault, contact your Home Fires Retailer from whom you purchased the appliance - They will be able to help you quickly or contact us at Home Fires on your behalf. You will need to provide a copy of your original sales receipt, installation certificate/or Building Control Certificate, and Service Record.

To register the extended warranty, please send an email to customercare@homefires.co.za. Please include your name, address of installation, model, and date of installation, Installers details, retailer details (where you purchased the stove and the date of purchase). We will confirm your registration by email, so if posting your registration, please ensure to include your email address.

For any general queries regarding the conditions of this guarantee, please contact us.

Installer Name and HETAS no. .....

Enter Model Name.....

Enter Installation Date.....

Enter Installation Address.....

Service Records (to be completed by Service Engineer)

1st SERVICE
Date of Service:.....
Next Service Due:.....
Details of Service work completed:

Signed:.....
Dealer's Stamp/HETAS Registration Number:

2nd SERVICE
Date of Service:.....
Next Service Due:.....
Details of Service work completed:

Signed:
Dealer's Stamp/HETAS Registration Number:

3rd SERVICE
Date of Service:.....
Next Service Due:.....
Details of Service work completed:

Signed:
Dealer's Stamp/HETAS Registration Number:

4th SERVICE
Date of Service:.....
Next Service Due:.....
Details of Service work completed:

Signed:
Dealer's Stamp/HETAS Registration Number:

5th SERVICE
Date of Service:.....
Next Service Due:.....
Details of Service work completed:

Signed:
Dealer's Stamp/HETAS Registration Number:

6th SERVICE
Date of Service:.....
Next Service Due:.....
Details of Service work completed:

Signed:.....
Dealer's Stamp/HETAS Registration Number:

7th SERVICE
Date of Service:.....
Next Service Due:.....
Details of Service work completed:

Signed:
Dealer's Stamp/HETAS Registration Number:

8th SERVICE
Date of Service:.....
Next Service Due:.....
Details of Service work completed:

Signed:
Dealer's Stamp/HETAS Registration Number:

9th SERVICE
Date of Service:.....
Next Service Due:.....
Details of Service work completed:

Signed:
Dealer's Stamp/HETAS Registration Number:

10th SERVICE
Date of Service:.....
Next Service Due:.....
Details of Service work completed:

Signed:
Dealer's Stamp/HETAS Registration Number: